DYMAXRAIL

BUILT TO LAST.

RAIL RIDER S-BL

HI-RAIL SOLUTION FOR BACKHOE LOADER

Once installed it stays with you

Keep your railgear on your backhoe with the Dymax Rail Rider S-BL Hi-Rail system. We've engineered it to fit directly into the stabilizer mounts, making it an excellent choice for Class 1 railroads and transit operators.

The Rail Rider S Hi-Rail gear is engineered stronger to meet the everyday demands of the rail industry. The stabilizer mounted railgear fits into the factory pin locations and the factory stabilizers then fit onto the outside of the new brackets. A new outrigger pad is provided to help reduce the overall width of the machine when transporting on highways. With the Rail Rider S, operators never have to leave the cab to raise the railgear. Available to fit Case, Caterpillar and John Deere models of backhoes.

PACKAGED MODELS

RAIL RIDER S-BL - QCH7 SERIES FOR CATERPILLAR 420, 430, 440 & 450

- For Cat Next Generation backhoe loaders.
- Package includes stabilizer mounted railgear, new outrigger pads, bolt-on hydraulic lift railgear to fit factory IT coupler, cab control group.
- Operate boom in full 180-degree rotation.
- Fully installed in 4-5 days and includes testing and factory gauge checks. All installations currently handled by DymaxRail at our assembly shop located at 400 Miller Drive, Wamego, KS 66547
- Contact sales 1-800-530-5407 for more information.

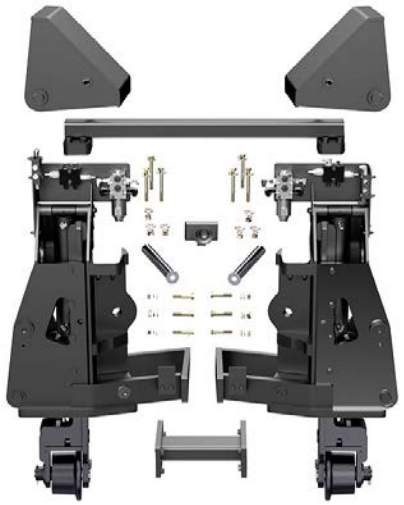

REAR STABILIZER MOUNTED GUIDE KIT

For fitting Cat Next Generation backhoe loaders

CAT IT COUPLER MOUNTED GUIDE KIT

For fitting Cat Next Generation backhoe loaders hydraulic lift gear

RAIL RIDER S-BL - DQH7 SERIES FOR JOHN DEERE 410 & 710

- Package includes stabilizer mounted railgear, new outrigger pads, Dymax-built front loader coupler with integrated hydraulic lift railgear, cab control group.
- Operate boom in full 180-degree rotation.
- Fully installed in 4-5 days and includes testing and factory gauge checks. All installations currently handled by DymaxRail at our assembly shop located at 400 Miller Drive, Wamego, KS 66547
- Contact sales 1-800-530-5407 for more information.

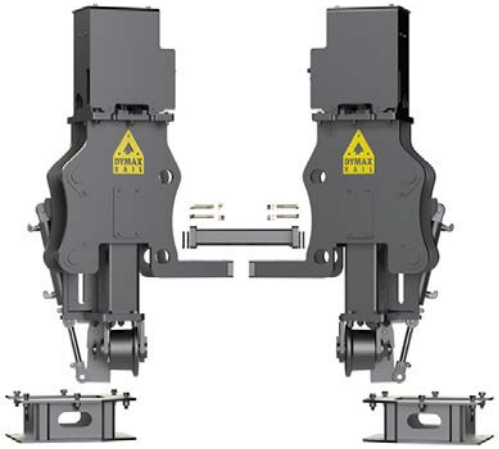

REAR STABILIZER MOUNTED GUIDE KIT

For fitting John Deere backhoe loaders

DYMAX FRONT COUPLER GUIDE

For fitting John Deere backhoe loaders hydraulic lift gear

DYMAX

OPTIONS

FRONT LOADER BUCKET RAILGEAR
Standard weld-on bucket mounted railgear for machinery without front loader couplers

RAIL CLAMPS
Optional solution to aid in reducing derail issues. currently availibe for John Deere 710P models.
Operates through separate controls only.
Coming soon to other brands.

WORK ATTACHMENTS

TIE HANDLER

TIE CRANE SLIDE GRAPPLE

CRIBBING CLAM BUCKET

BALLAST TAMPER SERIES 14

THUMB &CRIBBING BUCKET

SPECIFICATIONS

CATERPILLAR 420, 430, 440, 450

MODEL	DESCRIPTION	Weight (lbs) added to machine
QCH7 Models feature railgear that fits onto the front IT coupler system along with rear stabilizer mounted railgear systems.		
DX-RRDS-QCH7-CAT416-BL-10	Rail Rider Stabilizer Mounted-Factory Coupler Mounted Bolt on Hydraulic Lift Railgear Kit, 7in wheel diameter-Caterpillar 416-Backhoe Loader-Class 10	2,700
DX-RRDS-QCH7-CAT420-BL-10	Rail Rider Stabilizer Mounted-Factory Coupler Mounted Bolt on Hydraulic Lift Railgear Kit, 7in wheel diameter-Caterpillar 420-Backhoe Loader-Class 10	2,700
DX-RRDS-QCH7-CAT430-BL-10	Rail Rider Stabilizer Mounted-Factory Coupler Mounted Bolt on Hydraulic Lift Railgear Kit, 7in wheel diameter-Caterpillar 430-Backhoe Loader-Class 10	2,700
DX-RRDS-QCH7-CAT450-BL-20	Rail Rider Stabilizer Mounted-Factory Coupler Mounted Bolt on Hydraulic Lift Railgear Kit, 7in wheel diameter-Caterpillar 450-Backhoe Loader-Class 20	2,700
DQH7 Models are supplied with front Dymax Coupler with hydraulic lift railgear and rear stabilizer mounted systems.		
DX-RRDS-DQH7-CAT440-BL-20	Rail Rider Stabilizer Mounted-Dymax Front Coupler with Hydraulic Lift Railgear Kit, 7in wheel diameter-Caterpillar 440-Backhoe Loader-Class 20	2,850
DX-RRDS-DQH7-CAT450-BL-20	Rail Rider Stabilizer Mounted-Dymax Front Coupler with Hydraulic Lift Railgear Kit, 7in wheel diameter-Caterpillar 450-Backhoe Loader-Class 20	2,850
LBW7 Models are supplied with front loader bucket mounted railgear and rear stabilizer mounted systems.		
DX-RRDS-LBW7-CAT420-BL-10	Rail Rider Stabilizer Mounted-Loader Bucket Weld-On Railgear Kit, 7in wheel diameter-Caterpillar 420-Backhoe Loader-Class 10	2,475
DX-RRDS-LBW7-CAT430-BL-10	Rail Rider Stabilizer Mounted-Loader Bucket Weld-On Railgear Kit, 7in wheel diameter-Caterpillar 430-Backhoe Loader-Class 1	2,475
DX-RRDS-LBW7-CAT440-BL-20	Rail Rider Stabilizer Mounted-Loader Bucket Weld-On Railgear Kit, 7in wheel diameter-Caterpillar 440-Backhoe Loader-Class 20	2,475
DX-RRDS-LBW7-CAT450-BL-20	Rail Rider Stabilizer Mounted-Loader Bucket Weld-On Railgear Kit, 7in wheel diameter-Caterpillar 450-Backhoe Loader-Class 20	2,475

SPECIFICATIONS

JOHN DEERE 410, 710

MODEL	DESCRIPTION	Weight (lbs) added to machine
DQH7 Models are supplied with front Dymax Coupler with hydraulic lift railgear and rear stabilizer mounted systems. Coupler is compatible with JRB type hookups.		
DX-RRDS-DQH7-JD710P-BL-20	Rail Rider Stabilizer Mounted-Dymax Front Coupler with Hydraulic Lift Railgear Kit, 7in wheel diameter-John Deere 710P-Backhoe Loader-Class 20	2,850
DQW7 Models are supplied with front Dymax Coupler with manual flip down railgear and rear stabilizer mounted systems. Coupler is compatible with JRB type hookups.		
DX-RRDS-DQW7-JD410L-BL-10	Rail Rider Stabilizer Mounted-Dymax Front Coupler with Weld-On Railgear Kit, 7in wheel diameter-John Deere 410L-Backhoe Loader-Class 10	2,790
DX-RRDS-DQW7-JD710P-BL-20	Rail Rider Stabilizer Mounted-Dymax Front Coupler with Weld-On Railgear Kit, 7in wheel diameter-John Deere 710P-Backhoe Loader-Class 20	2,790
LBW7 Models are supplied with front loader bucket mounted railgear and rear stabilizer mounted systems.		
DX-RRDS-LBW7-JD410L-BL-10	Rail Rider Guide-Rear Dolly with Dymax Front Coupler with Weld-On Railgear Kit, 7in wheel diameter-John Deere 310-Backhoe Loader-Class 10	2,475
DX-RRDS-LBW7-JD710P-BL-20	Rail Rider Guide-Rear Dolly with Dymax Front Coupler with Weld-On Railgear Kit, 7in wheel diameter-John Deere 410-Backhoe Loader-Class 10	2,475
Design and specifications are subject to change without notice		

DYMAX

DYMAXRAIL
402 Miller Drive
Wamego, KS 66547 USA

Toll Free: 800.530.5407 (USA/CAN)
Office: +1.785.456.2081
Fax: +1.785.456.8328

www.DYMAXRAIL.com
sales@DYMAXRAIL.com

402 Miller Drive | PO BOX 297 | Wamego, KS 66547 USA
US: 1-800-530-5407 | WORLD WIDE: 785-456-2081